

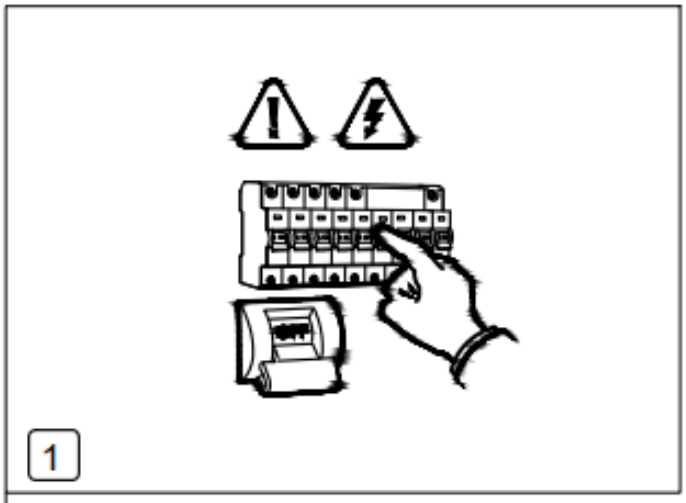
1

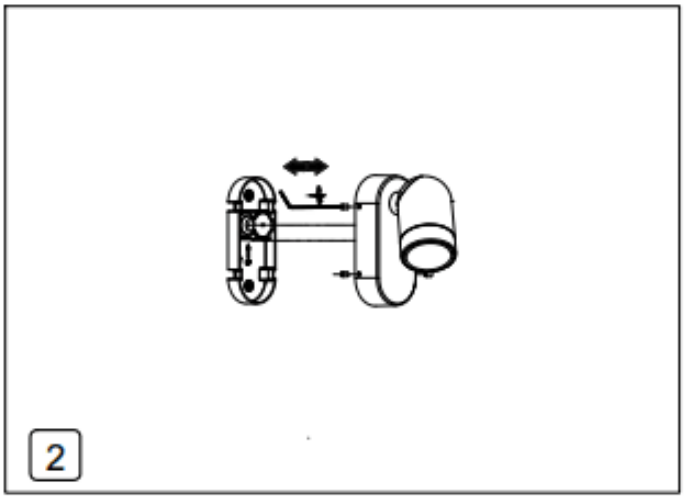
2

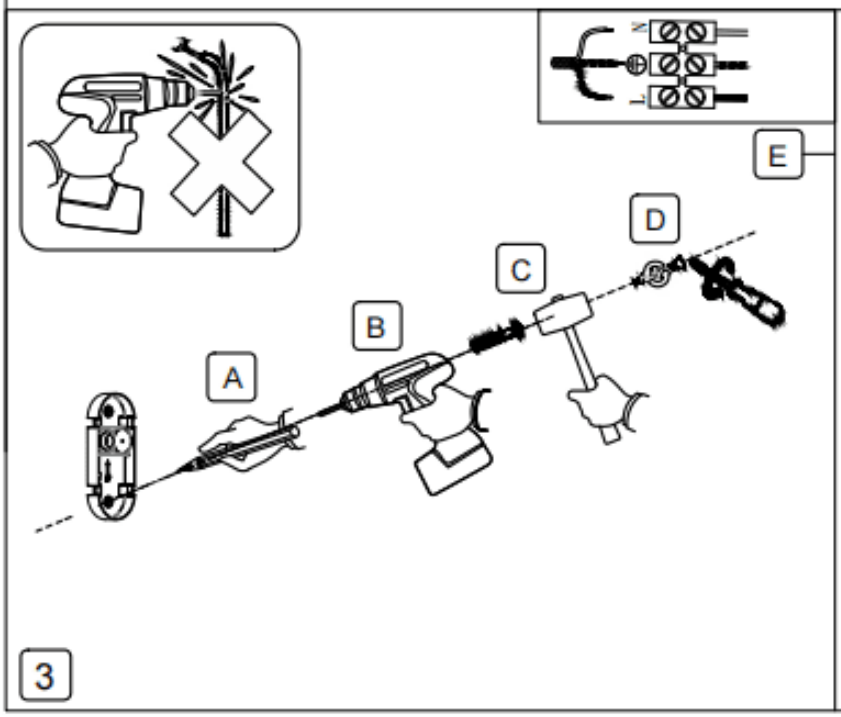
E
D
C
B
A
3

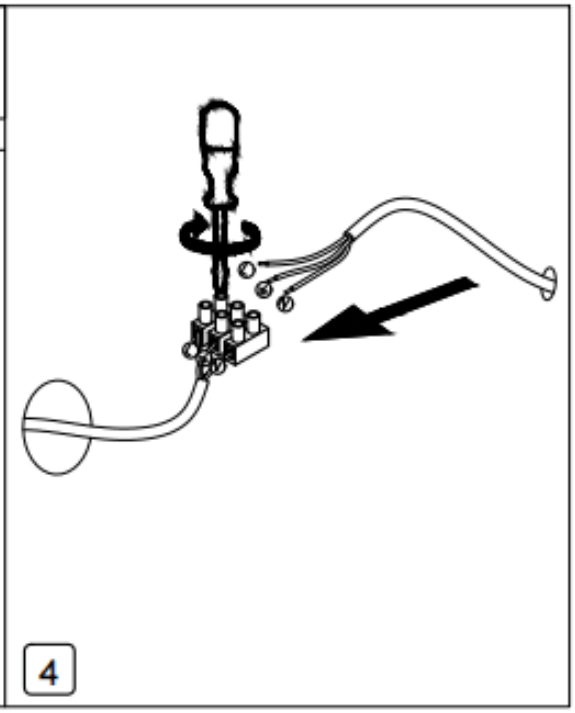
4

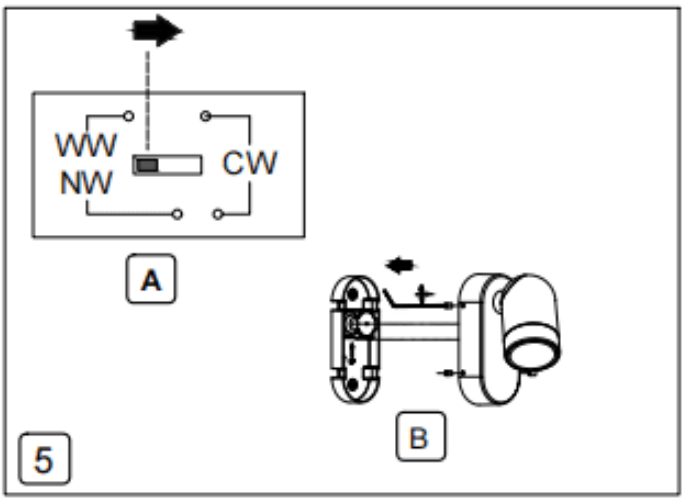
WW
NW
CW
A
B
5

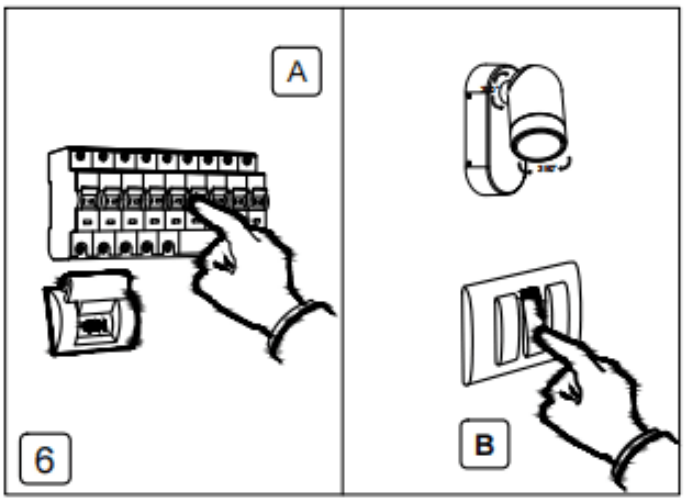
A
B
6